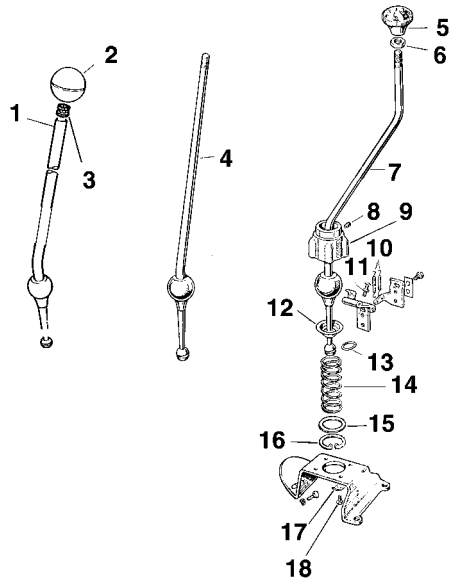

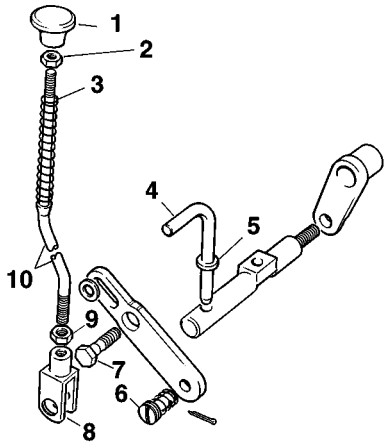

MAIN GEARSHIFT LEVER

Ref #	Description	Qty	Part #
1	Main Gearshift Lever, 2-1/4 all, LHD (does not include knob)	1	7144
1	Main Gearshift Lever, 2-1/4 all, RHD (does not include knob)	1	4768
2	Knob for Lever, Sliding	1	2860
3	Tolerance Ring for Knob	1	****NLA* 2859**
4	Main Gearshift Lever, (2 Litre)	1	****NLA* 347**
5	Knob, Threaded	1	****NLA* 2866**
8	Locating Pin for Ball	1	845
9	Housing for Lever	1	1272
10	Spring for Reverse Stop	2	1577
11	Locknut	1	4045
12	Seat for Gear Lever	1	1273
13	O Ring for Gear Change Lever	1	4049
14	Retaining Spring for Lever	1	1274
15	Retaining Plate for Spring	1	3001
16	Circlip for Retainer Plate	1	3002
18	Set Bolt	1	6758
	Transmission Lever Boot	1	6298
➜	**BOOT & KNOB KIT**	**KIT**	**6214**

Includes:
- 1 - #6298 Transmission Boot,
- 1 - #6357 Handbrake Boot,
- 1 - #6299 Transfer Lever Boot,
- 1 - #6213 Transfer Knob (red),
- 1 - #6396 Four Wheel Knob (yellow)
- 1 - #2860 Knob, Gear Shift

***NLA* = No longer available.**

TRANSMISSION SELECTOR ROD

Ref #	Description	Qty	Part #
1	Knob, Yellow	1	6396
2	Nut	2	711
3	Spring	1	5817
4	Pin, Forward Pivot Shaft	1	7157
5	O Ring	1	4053
6	Clevis Pin	1	5887
7	Bolt, Four Wheel Drive Lever	1	****NLA* 6143**
8	Clevis	1	6219
9	Nut	2	711
10	Selector Rod, FWD	1	6146

***NLA* = No longer available.**